STS 2K3

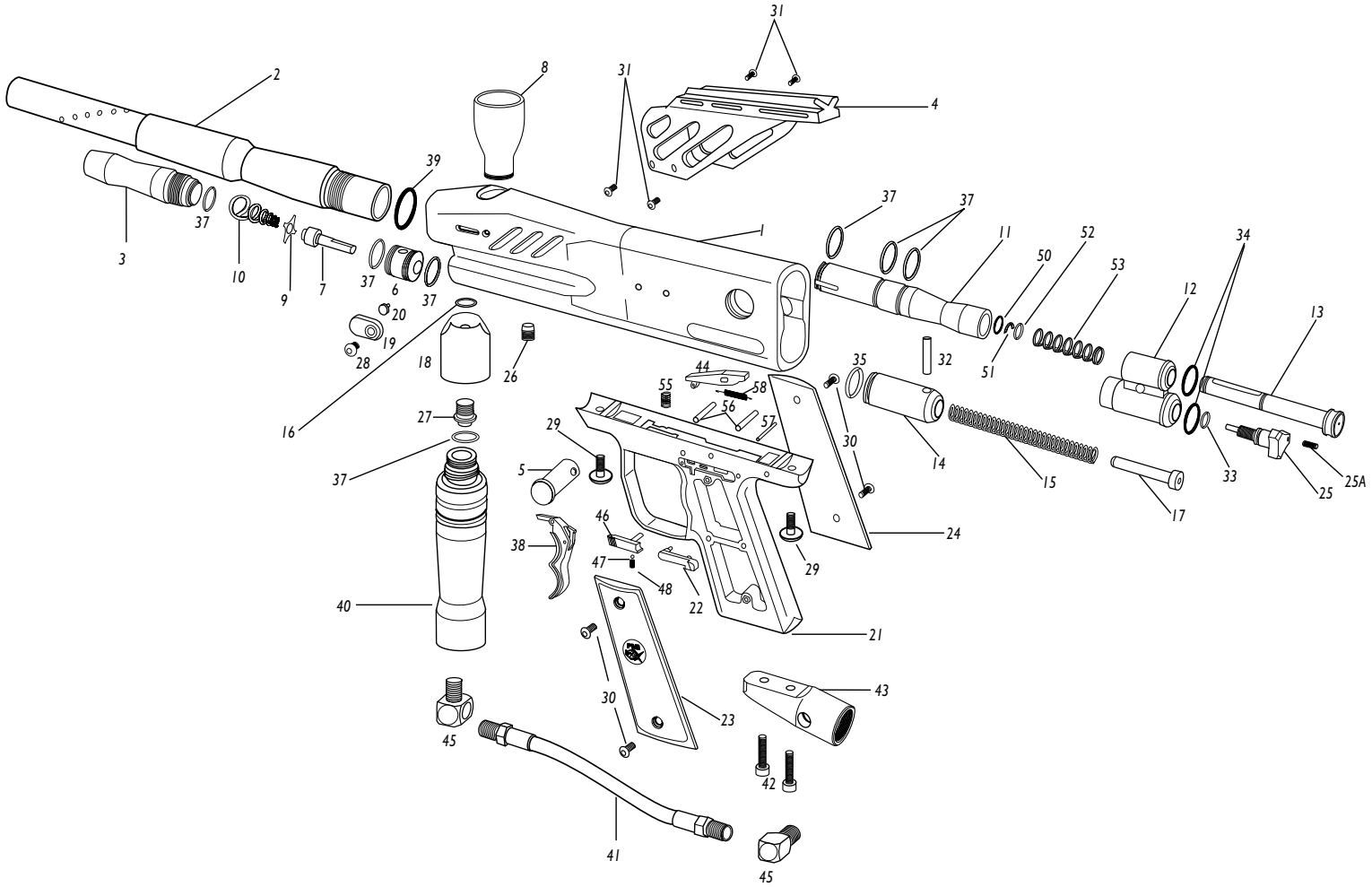

1.	Receiver	71500	31.	Sight Rail Screws	71581
2.	Barrel	71550	32.	Bolt Pin	10291
3.	Optimized Pressure Chamber	71530	33.	Velocity Screw O-Ring	10460
4.	Sight Rail	71570	34.	Rear Block O-Ring	10260
5.	Field Strip Pin	10021	35.	Hammer O-Ring	10361
6.	Valve Body	10510	37.	Bolt O-Ring	41010
7.	Valve Cup Seal Assembly	10127	37.	ASA O-Rings	41010
8.	Vertical Top Tube	71510	37.	Valve O-Rings	41010
9.	Valve Guide	10520	37.	Gas Thru Grip O-Ring	41010
10.	Valve Spring	71597	37.	Optimized Pressure Chamber O-Ring	41010
11.	Venturi Bolt	10209	38.	Trigger	10050
12.	Flush Cocking Rear Block w/ Cushion	10408	39.	Barrel O-Ring	10161
13.	Cocking Rod	10201	40.	Gas Thru Foregrip	10788
14.	Hammer	10310	41.	6.75" SS hose	47061
15.	Hammer Spring	71598	42.	Bottom line SS screw	42016
16.	ASA O-Rings	10608	43.	10° Bottom Line Adapter	42013
17.	Spring Guide	10301	44.	Sear	10721
18.	Vertical ASA Adapter	71520	45.	90 Elbows	47000
19.	Ball Detent Cap	10101	46.	Safety Slide	10702
20.	Ball Detent	10160	47.	Safety Ball	10730
21.	Double Trigger Frame Assembly	10052	48.	Safety Spring	10750
22.	Sear Release Slide	10702	50.	Flush Cocking Guide O-Ring	10212
23.	Grip Left	10703	51.	C-Clip	10207
24.	Grip Right	10704	52.	Retaining Washer	10206
25.	Thumb Adjust Velocity Screw	10482	53.	Flush Spring	10203
25A.	Velocity Lock Screw	42029	55.	Trigger Spring	10752
26.	Valve Set Screw	10513	56.	Sear/Trigger Pin	10766
27.	ASA Screw	71580	57.	Sear Spring Pin	10767
28.	Ball Detent Screw	10180	58.	Sear Spring	10753
29.	Trigger Frame Screws	70537			
30.	Grip Screws	10782			